- BLANK SET-UP SHEET -

Capricorn RC

Front

Type 1 Type 2 Type 3

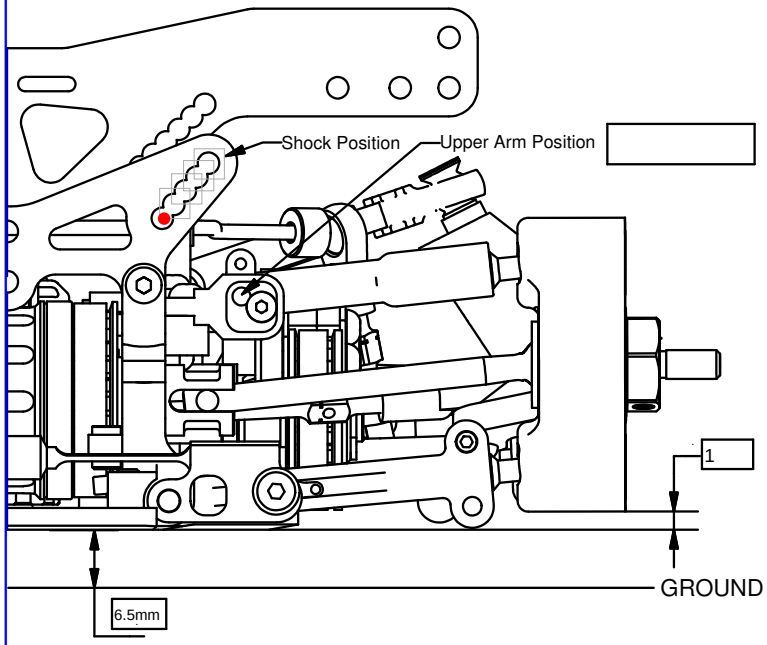

CAMBER	TOE	WIDHT
LEFT 1.5	1°	198
RIGHT 1.5		

ACKERMANN INSERTS					
10mm	☐	11mm	☐	12mm	■

GEAR DIFF. OIL
250'000

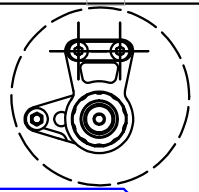

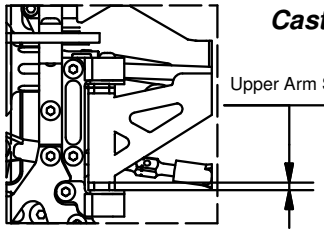

Caster Angle

Upper Arm Spacers 2

Made in Italy

FRONT			REAR	
LEFT	RIGHT	**TYRES**	LEFT	RIGHT
Matrix	Matrix	**TYPE**	Matrix	Matrix
37	37	**SHORE**	40	40
62	62	**DIAMETER**	64	64
SHOCK ABSORBERS				
60	60	**OIL**	80	80
red	red	**SPRING**	red	red
1 2 3 4 5 6 (■ 3)	1 2 3 4 5 6 (■ 3)	**DAMPING**	1 2 3 4 5 6 (■ 3)	1 2 3 4 5 6 (■ 3)

ANTI-ROLL BARS

0°	30°	45°	60°	90°					
☐	☐	☐	☐	☐	☐	■	☐	☐	☐
Wire ■ 0,9	☐ 1,0	☐ 1,1			2,0	2,1	2,2	2,3	2,4

1 ST SPUR GEAR 2 ND

■	☐	☐	■	☐	☐
52	53	54	47	48	49

1 ST PINION 2 ND

☐	■	☐	■
14	15	19	20

DRIVE TRAIN

MIDDLE AXLE PULLEY	■	☐
	25	26

ENGINE

TYPE Maxima MUFFLER Maxima
PLUG OS RP6 NITRO Maxima 16%

BODY TYPE SRS PF

SET-UP SHEET

NAME Eric Dankel
DATE
TEMP
TRACK Melzo ENS Rd.1
TRACTION Mid
RESULT 1 BEST LAP

Rear

Type 1 Type 2 Type 3

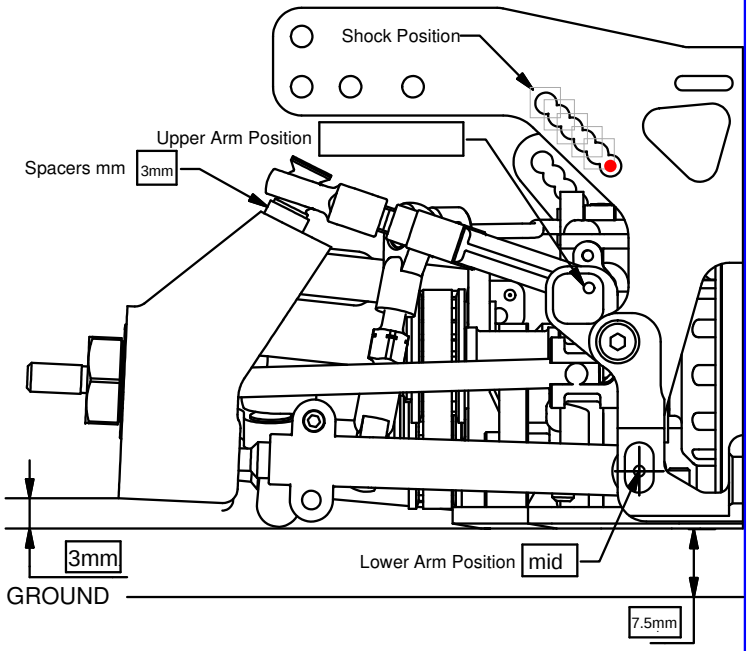

CAMBER	TOE	WIDHT
LEFT 3	2°	200
RIGHT 3		

WHEEL BASE				GEAR DIFF. OIL
SHORT	☐	LONG	■	100'000

Additional notes

Handout Tyres no additive